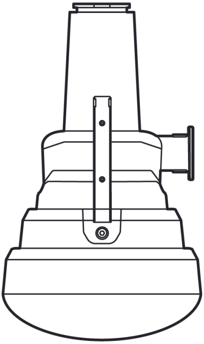

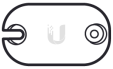

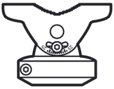

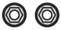

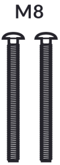

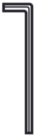

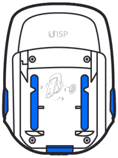

✓

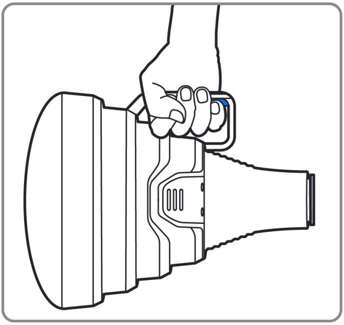

✗

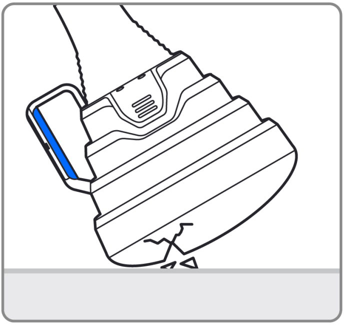

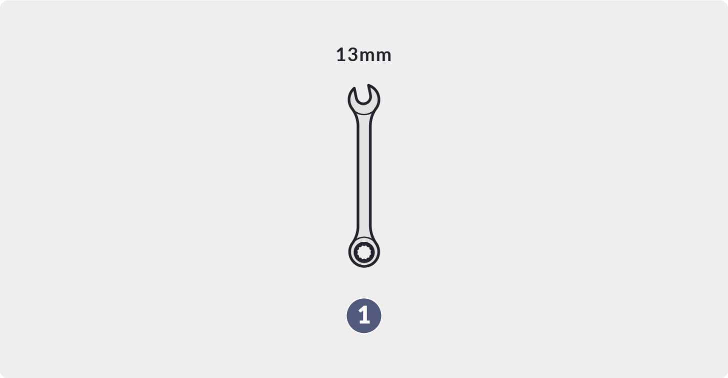

1

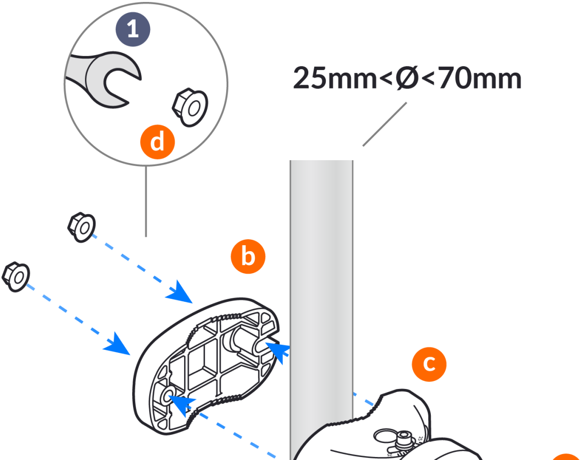
1
d
25mm<Ø<70mm
b
c

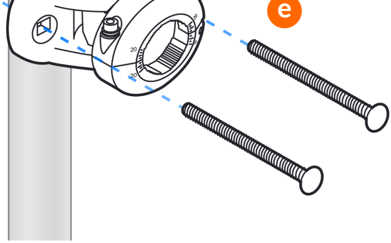

2

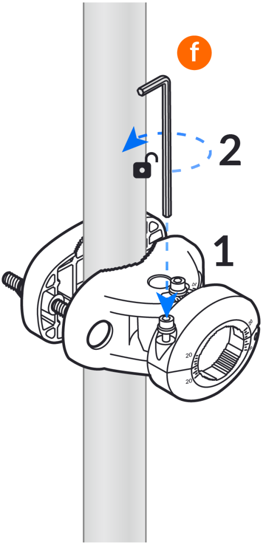

3

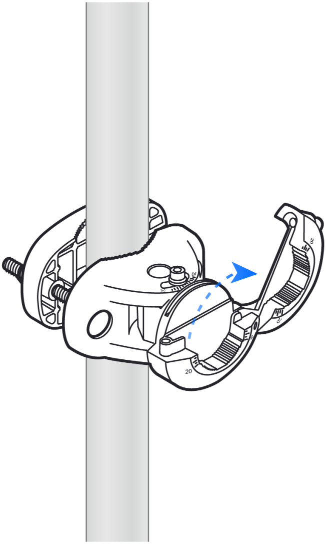
25
25
20
20
20

4

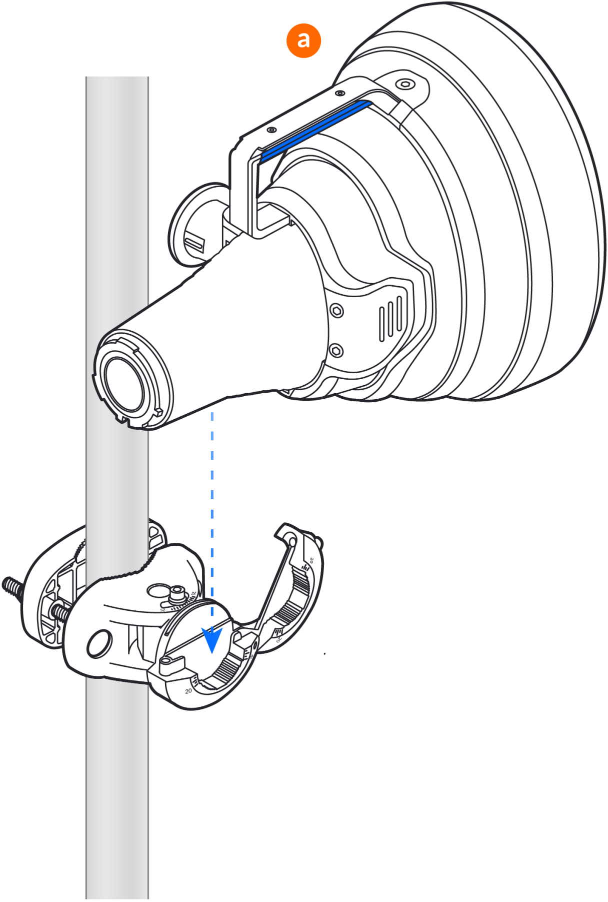

5

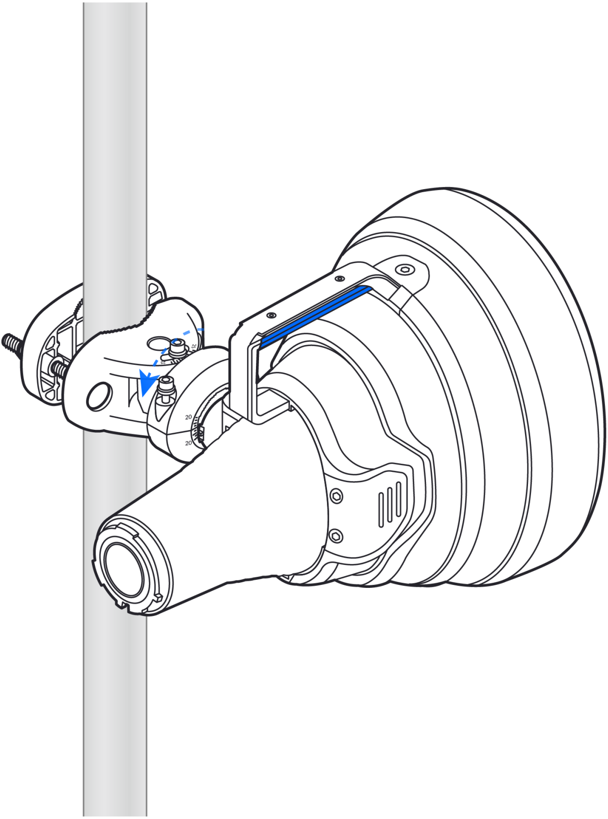

6

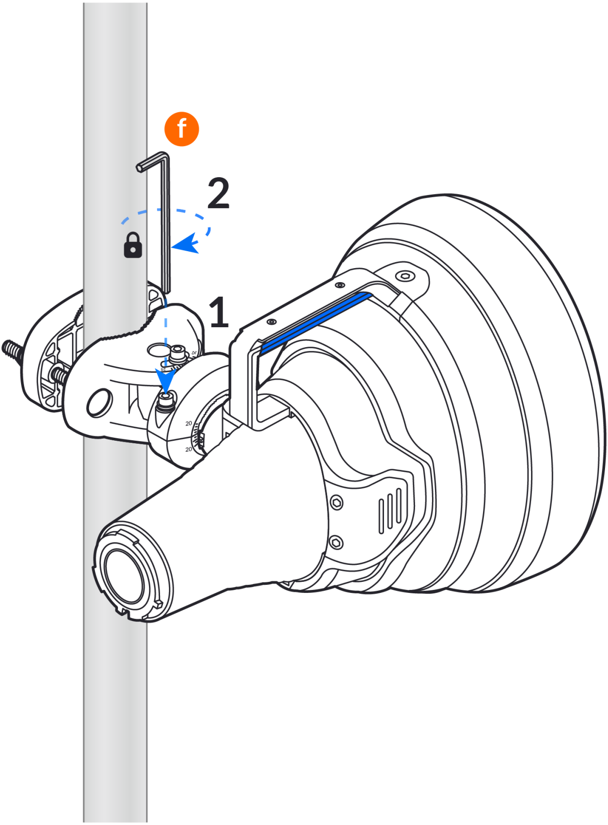

7

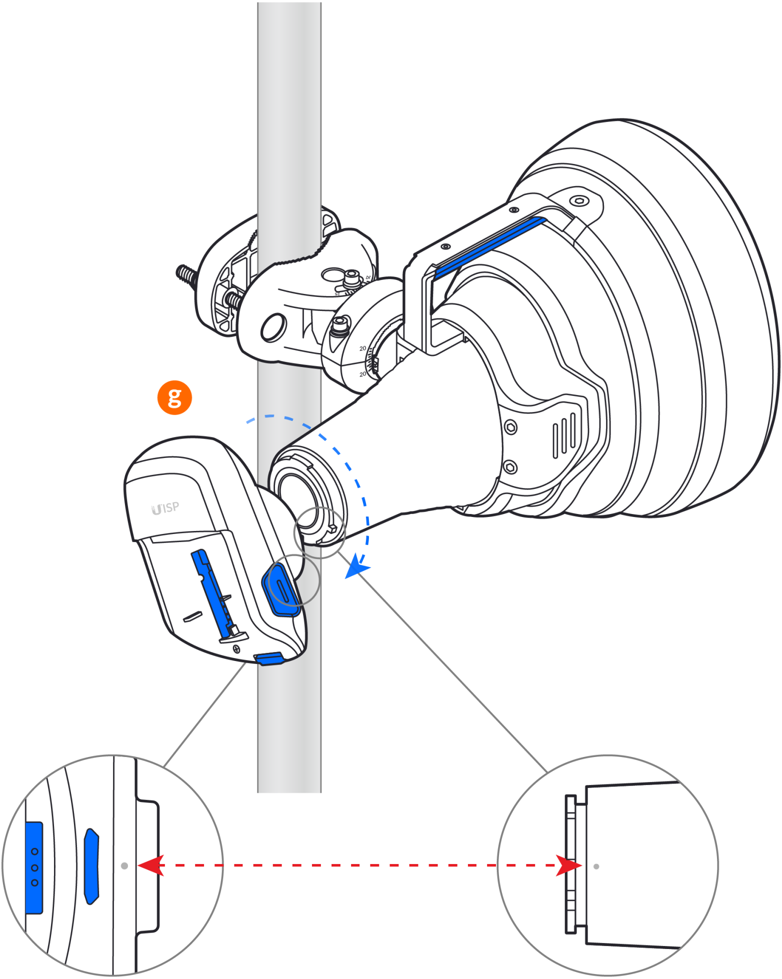

8

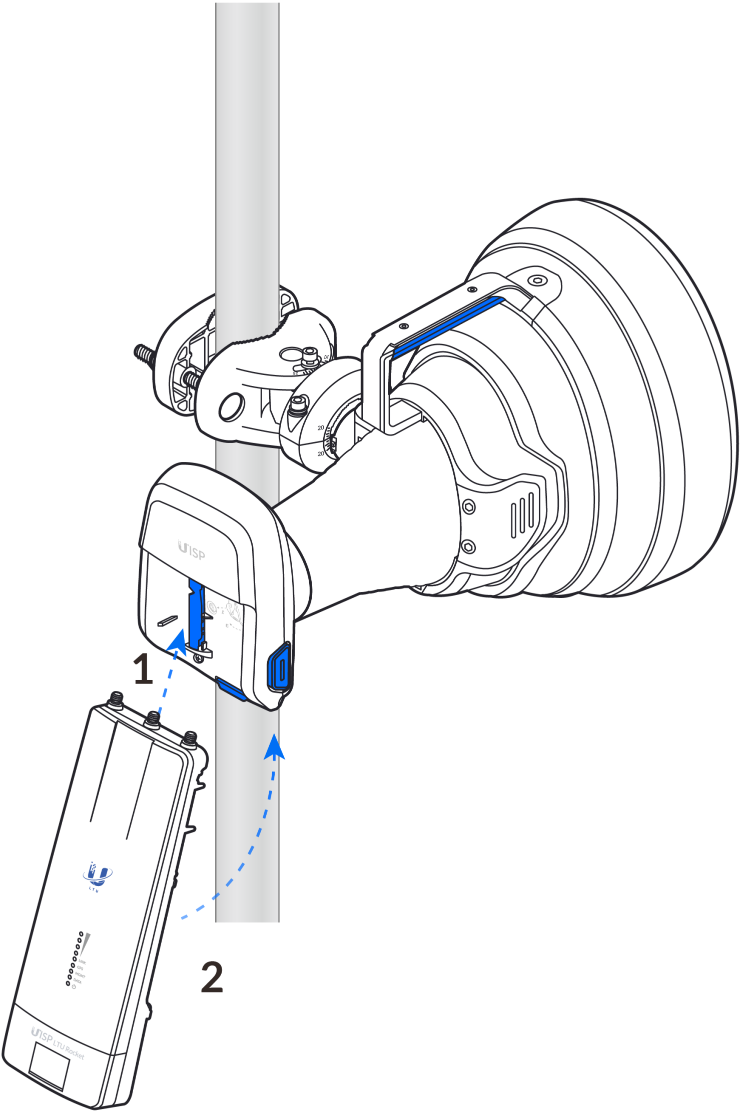
1
2
UISP
LTU
LINK
GPS
MGMT
DATA
UISP LTU Rocket
20
20
25

9

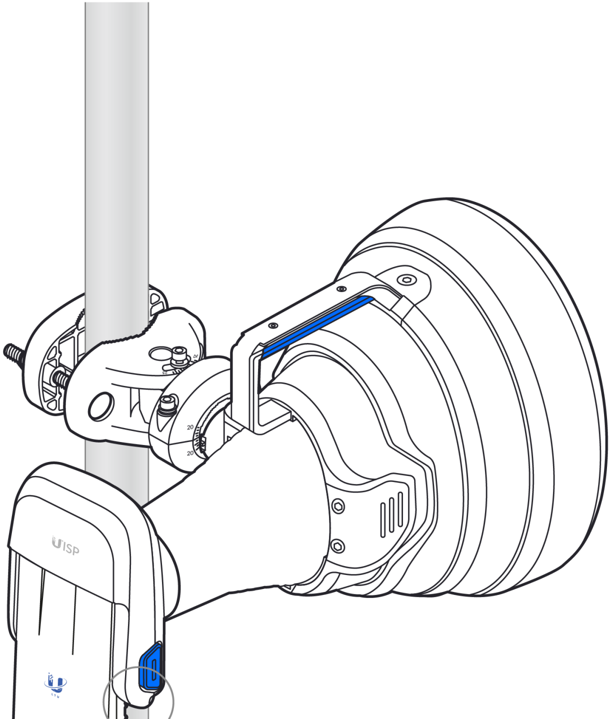

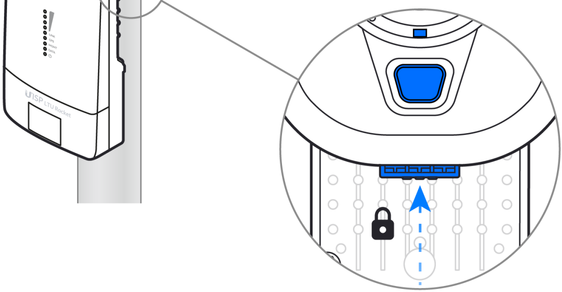
UISP LTU Rocket

10

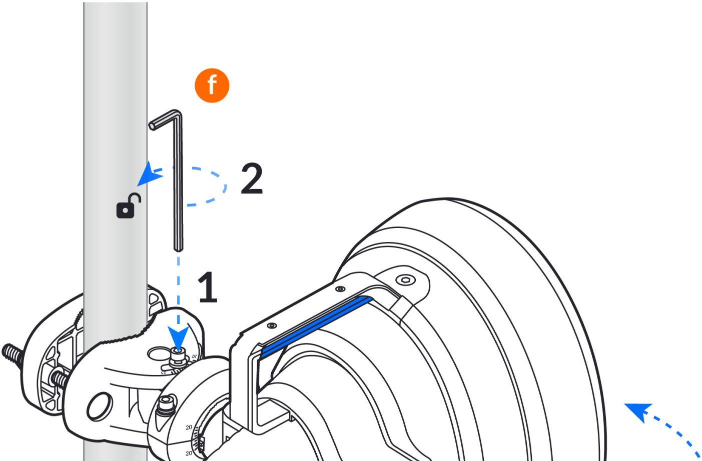

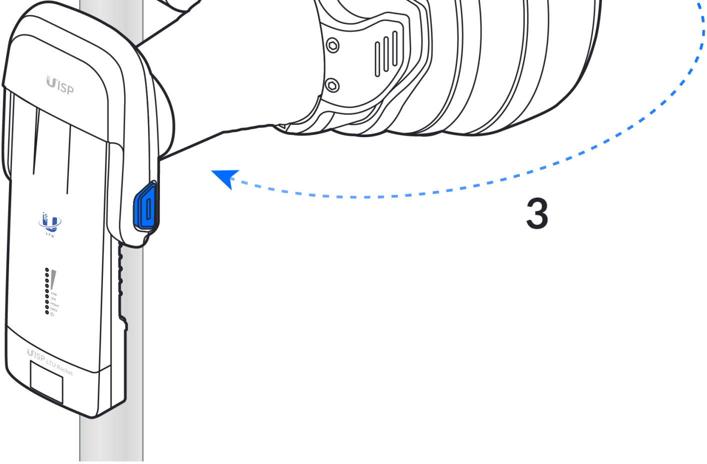

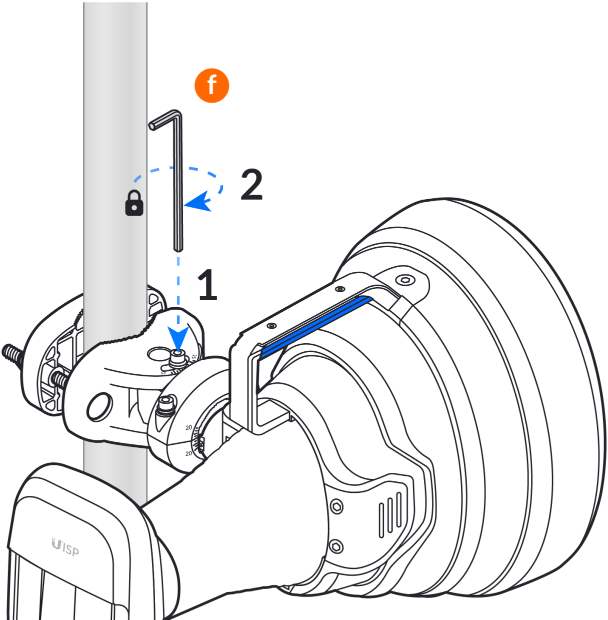

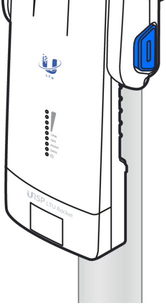
UISP LTU Rocket

11

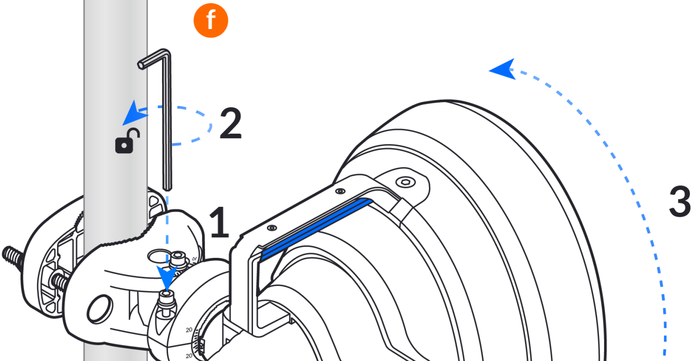

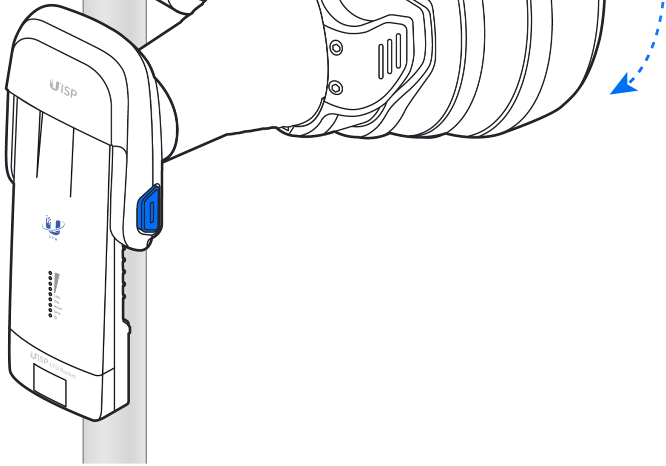
UISP
LTU
UISP LTU Rocket

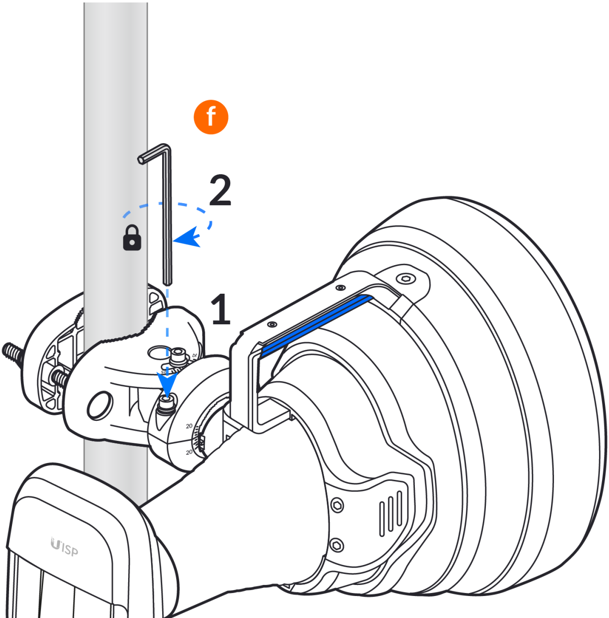
f
2
1
20
20
UISP

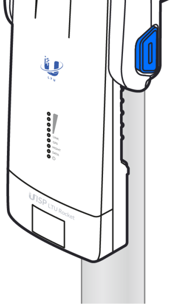
LTU
LINK
GPS
MGMT
DATA
UISP LTU Rocket

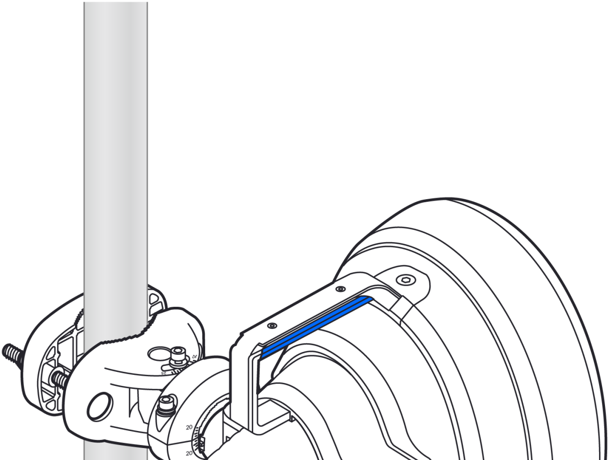

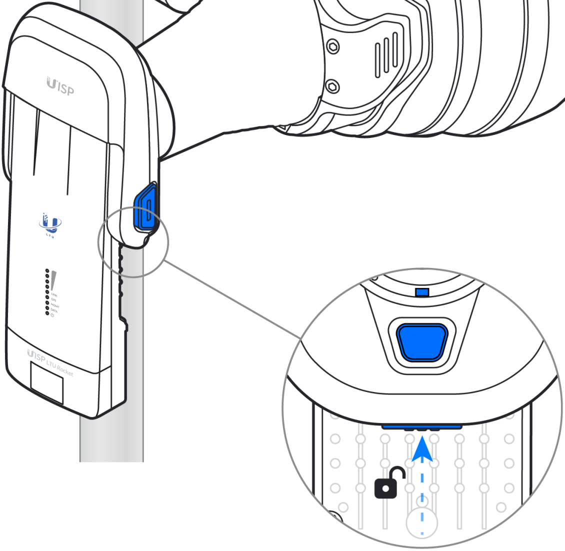
UISP
LTU
UISP LTU Rocket

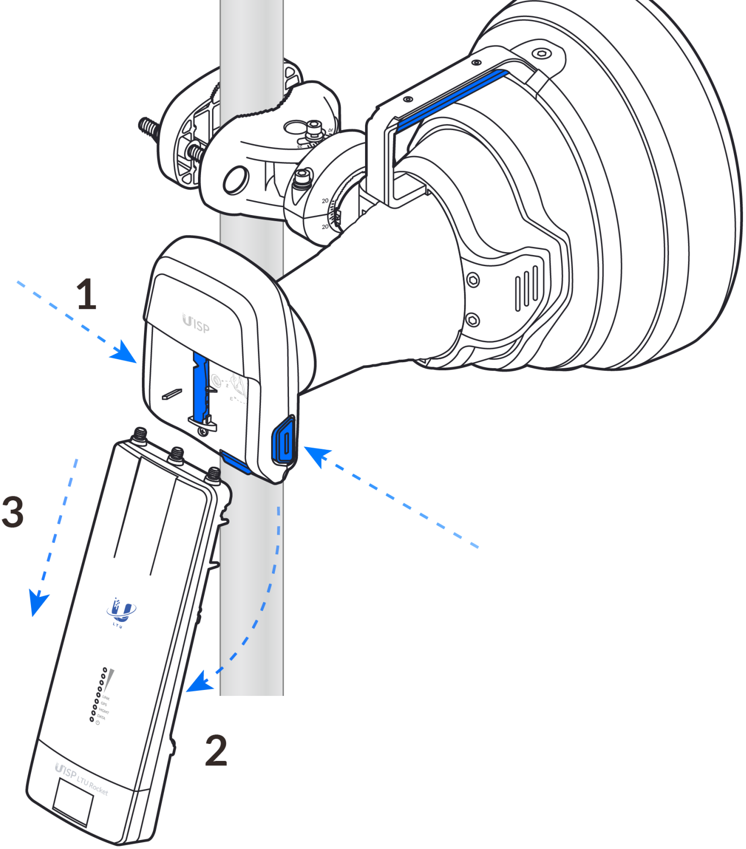
1
2
3
UISP
LTU
LINK
GPS
MGMT
DATA
UISP LTU Rocket

A

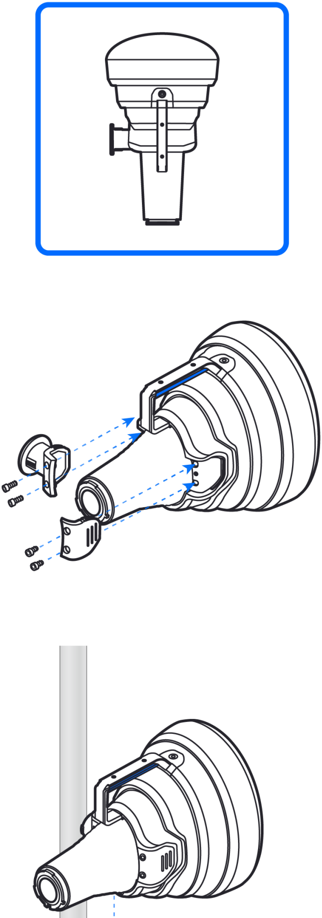

B

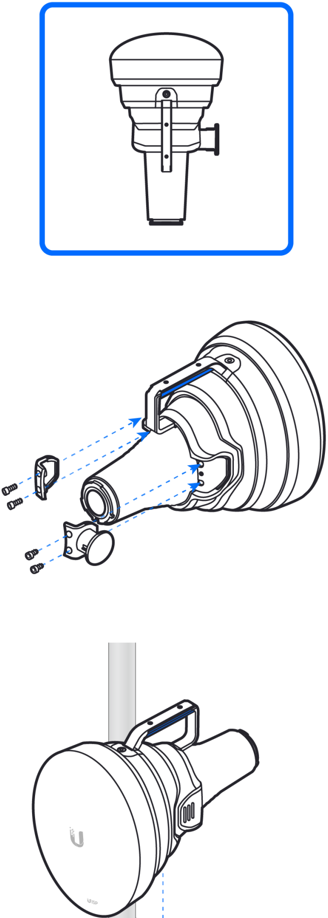

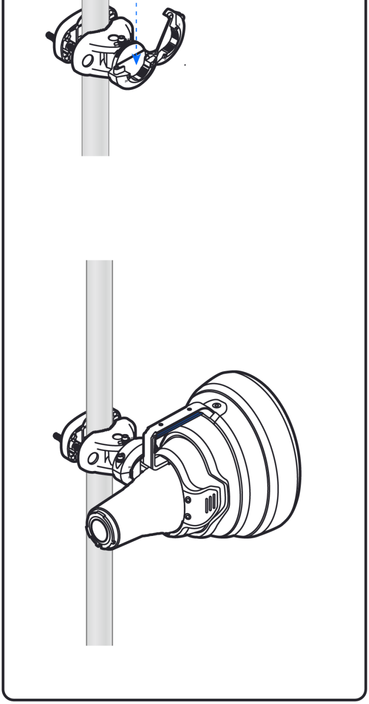

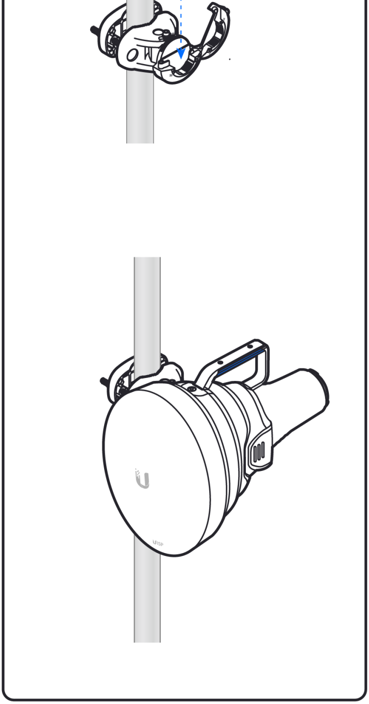

Get Answers
help.ui.com

UI Support

©2021 Ubiquiti Inc. All rights reserved. Ubiquiti, Ubiquiti Networks, the Ubiquiti U logo, UISP, and UniFi are trademarks or registered trademarks of Ubiquiti Inc. in the United States and in other countries. All other trademarks are the property of their respective owners.